Selekta Manajemen: Jurnal Mahasiswa Bisnis & Manajemen
Vol. 01, No. 01, 2022, pp. 123-137
https://journal.uii.ac.id/selma/index

Research Article

The Impact of Electronic Word-of-Mouth on Purchase Intention in Tripadvisor

Devita Diana Intansari, Ratna Roostika [a)]
Faculty of Business and Economics
Universitas Islam Indonesia

[a)]Corresponding author: ratna.roostika@uii.ac.id

ABSTRACT

This study aims to examine the effect of E-Wom among customers on purchase intentions on information media pages that provide information about products on Tripadvisor. This research uses purposive sampling technique. There were 270 respondents in this study. The model was analyzed by using structural equation modeling (SEM) with AMOS program. This study found that informative perceptions support E-Wom, persuasive perceptions support E-Wom, source expertise does not support E-Wom, trust in sources supports E-Wom, E-Wom usefulness supports e-Wom adoption, E-Wom adoption supports purchase intention, and the relationship between usefulness and decisions on purchase intention are mediated by E-Wom adoption.

Keywords: E-Wom, perceived informativeness, perceived persuasiveness, source expertise, source trustworthiness, purchase intention.

INTRODUCTION

The development of information technology is very rapid, one of which is the use of the internet. Access to information through the internet gave birth to social media networks, that is various applications for the society. Some of these applications include Instagram, Twitter, YouTube, Facebook, and WhatsApp. The results of the Digital 2020 report that was launched by wearesocial.com in January 2020, the number of internet users around the world showed an increase of 7 percent from the previous year. This number has reached 4.54 billion people (wearesocial.com, 2020). Based on the results of the same report, in January 2020, Indonesia experienced a 17 percent growth in internet users from the previous

year. As many as 175.4 million internet users in Indonesia who use the internet from the total population of the society (wearesocial.com, 2020).

In this report, it is known that currently there are 338.2 million Indonesians who use telephones. Likewise, there are 160 million active social media users. Therefore, the existence of a large population in Indonesia accompanied by the rapid growth of internet and telephone users can create potential for digital economic activities in Indonesia. Observations result (wearesocial.com, 2020) stated that as many as 11 percent of the total population in Indonesia made purchases and payments through online bills. Data from the same institution also states that online trading activities in Indonesia to look for products or services are 93 percent. In addition, the results of the report (wearesocial.com, 2020) also state that 90 percent of internet users visit online stores through websites. In addition to using a mobile device or tablet, purchasing products or services online also uses a laptop or computer device.

At the earlier time, the communication was done directly or face to face and turned into interaction using online social media. Communication with online social media has the potential to form E-Wom electronic word of mouth. E-Wom or electronic word of mouth (e-Wom) in the context of network review sites is called online customer review. Online customer reviews help to collect and disseminate information from fellow customers according to the needs of each customer. Information disseminated by customers can be positive or negative.

Several information media pages that discuss travel products in Indonesia include Tripadvisor, Traveloka, Tiket.com. In addition to providing information, these information media pages also provide a platform for communication between sellers and buyers as well as between buyers. This results in an online customer review which will later lead to E-Wom between customers. Based on a survey conducted by the Deloitte Consumer Products Group, as many as 60 percent of customers read online reviews from other customers and 82 percent of these customers consider E-Wom in their purchasing decisions (Fang, 2014). The large number of customers who consider this provides an opportunity for business people to increase the number of E-Wom activities on information media pages (Tien, 2019). Marketers can analyze customer requests through data obtained from E-Wom activities on information media pages (Larson, 2011).

Studies on the relationship between E-Wom among customers on purchase intention have been carried out previously (Zhu, 2016) and (Tien, 2019). This research is a replication of previous research conducted by (Tien, 2019). In the study (Tien, 2019) research respondents are university students in Taiwan with the majority aged 26-35 years old who actively use social networking sites such as Facebook, Line, and Instagram. However, the E-Wom mechanism between fellow customers on social networking sites that forms purchase intentions is still unclear (Tien, 2019). Based on the study (Tien, 2019), the study presents a

discussion of the E-Wom mechanism in which E-Wom content (informative and persuasive perceptions) and information sources (expertise and trust in sources) affect customer perceptions regarding the usefulness, credibility, and adoption of E-Wom.

In this study, researchers used Tripadvisor as the object of research, the researchers themselves felt that in traveling many people use Tripadvisor as their online partner in buying products such as travel products. Not only selling and providing product information, Tripadvisor also provides information on recommended destinations in a city that customers want to visit. This study aims to examine the effect of E-Wom among customers on purchase intentions on information media pages that provide information about products on Tripadvisor.

LITERATURE REVIEW AND HYPOTHESIS

E-Wom

E-Wom is a communication activity in social media. E-Wom is the process of exchanging information in the form of positive or negative statements made by potential customers, customers, or former customers for a product, service, or brand to be accessed by others via the internet. Changes in communication that was originally face to face to be in social media. This communication can be in the form of online discussion forums, blogs, review sites and social networking sites (King, 2014). Online discussion forums provide an effective medium for users to share opinions online (Cheung, 2014). Customers can exchange experiences and opinions without any restrictions regarding a product they have used.

E-Wom Adoption

Information adoption is a process by which customers intentionally use information from (Cheung, 2008). The adoption of E-Wom information is closely related to the level of customer acceptance in using E-Wom to make purchasing decisions. E-Wom occurs when information is transferred from one person to another online or on social media. E-Wom emerged because of the paradigm shift in human life, which initially communicated face-to-face to become through the internet.

E-Wom Credibility

E-Wom credibility examines the extent to which customers perceive reviews or recommendations as factual, true, and trustworthy (Cheung, 2009). Credibility is a subjective part of the quality of information (Tien, 2019). The credibility of E-Wom is influenced by the persuasive power of the message (Fang, 2014). If the

online review or recommendation includes a persuasive message, the reader as the recipient of the message will have a positive attitude (Zhang, 2014).

Perceived Informativeness

According to Sullivan in (Tien, 2019), the perception of informativeness is contained in a complete message containing in-depth and broad information. Messages containing relevance, timeliness, and completeness of information affect customer perceptions of informativeness (Zhang, 2014). Informativeness is a major part of the quality of E-Wom messages (Zhang, 2014).

Perceived Persuasiveness

According to (Zhang, 2014), persuasive perception is a general perception of the persuasive power contained in online reviews. Online reviews containing someone's opinion or opinions contain information messages needed by customers. (Gunawan, 2015) states that customers need messages on social networking sites that have persuasive power in order to get useful information. Meanwhile, according to Bhattacherjee and Sanford in (Zhang, 2014), customers will adopt information when the information contains external persuasion that contributes to decision making that is profitable for customers.

Source Expertise

Fang (2014) states that source expertise refers to the level of confidence the reader as the recipient of information has on the source for his knowledge in making valid statements. Source expertise is the reader's perception of the ability of information sources to provide an assessment of a product. The expertise and qualifications of the source influence the reader to use the information and change his attitudes and intentions about a particular product (Baber, 2016). Sourcing expertise is the extent to which the information provider has knowledge and experience of a product or service.

Source Trustworthiness

According to (Baber, 2016) trust in sources is the level of reader acceptance of information based on the characteristics of sources that communicate authentically and sincerely. (Baber, 2016) adds that trust in sources is an aspect where people who provide information on a product or service can be trusted, honest, reliable, and fair.

Purchase Intention

Purchase intention is the extent to which customers will plan consciously to make purchasing decisions on attractive products (Cheung, 2008). Meanwhile, other research sources say that purchase intention shows that customers will buy a certain brand or product in the future. Purchase intention is one of the main components of customer cognitive behavior that shows how customers have the intention to buy a particular brand or product. This research model is a replication of the previous research model conducted by (Tien, 2019) regarding the customer mechanism for E-Wom customers on social networking sites influencing purchase intentions.

Model & Hypotheses

H1: *Perceived informativeness has a positive effect on the credibility of E-Wom.*
H2: *Perceived persuasiveness has a positive effect on the credibility of E-Wom.*
H3: *Source expertise has a positive effect on the credibility of E-Wom.*
H4: *Source trustworthiness in sources has a positive effect on the credibility of E-Wom.*
H5: *E-Wom credibility has a positive effect on the adoption of E-Wom*
H6: *E-Wom adoption has a positive effect on purchase intention*
H7: *Adoption of E-Wom mediates the relationship between the usefulness and credibility of E-Wom on purchase intention on social networking sites*

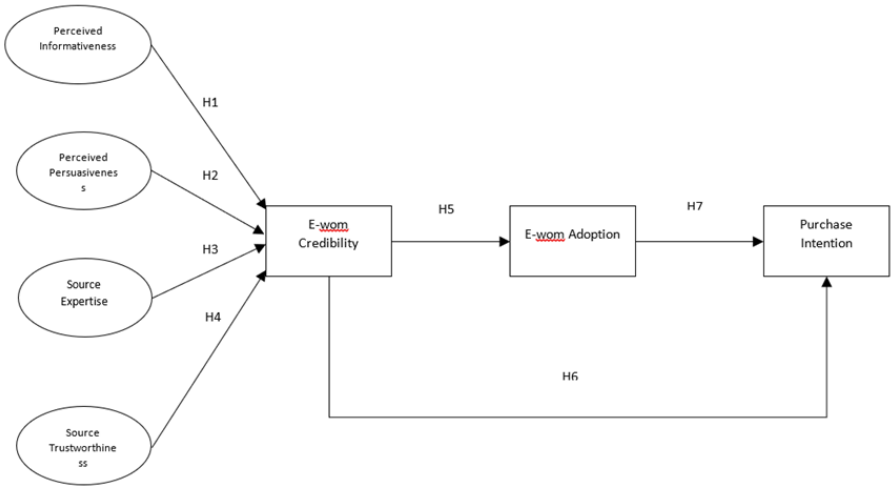

Figure 1. Research Framework

METHODOLOGY

This study uses a quantitative approach strategy by conducting a survey method, which is through the distribution of questionnaires. This study uses one of the techniques contained in several non-probability sampling methods, namely the

purposive sampling technique. The sample criteria in this study are female and male respondents aged at least 18 years who access Tripadvisor but have never made a Tripadvisor purchase. The sample that researchers used was 270. Thus, the respondents of this study were 270.

Data Analysis Method

In this study, the model was analyzed by structural equation modeling SEM (Structural Equation Modeling) using the AMOS program. This research uses validity test and reliability test. Construct validity in this study was carried out using confirmatory factor analysis (CFA). The condition that must be met is to have a significant loading factor, so the standardized loading estimate must be equal to 0.50 or more and ideally 0.70 (Hair, 2014). In this study, to test the reliability of the instrument used, namely Composite Reliability. The criteria or cut off value of composite reliability is a minimum of 0.70.

Table 1. Respondents' Characteristics

Demographic variables	Frequency	Percentage
Gender		
Male	71	26%
Female	199	74%
Age		
15-30 years old	225	83%
31-40 years old	23	8,6%
41-50 years old	22	8,4%
Education		
Junior High School	1	0,6%
Senior High School	27	10%
Bachelor	222	81,9%
Master & Doctors	20	7,5%
Income		
< 2.000.000	88	32,6%
2.000.000– 5.000.000	139	51,1%
>5.000.000	44	16,3%
Total Respondent	270	100%

Source: Data Processing (2021)

Structural Equation Model Analysis

The analysis used to prove the hypothesis is the calculation of the Structural Equation Model (SEM) with AMOS 24 software. The model development in this study is based on the concept of data analysis. In general, this research model

consists of 4 exogenous variables and 3 endogenous variables. The exogenous variables in this study are perceived informativeness (PI), perceived persuasiveness (PP), source expertise (SE) and source trustworthiness (ST). The endogenous variables in this study are the credibility of E-Wom (E-Wom CRE), E-Wom adoption (E-Wom ADOPT) and purchase intention (PI).

Confirmatory Analysis

Confirmatory analysis is used to test the concept built using several measurable indicators. In the confirmatory analysis, the first thing to look at is the loading factor value of each indicator. Loading factor can be used to measure construct validity where a questionnaire is said to be valid if the questionnaire is able to reveal something that is measured by the questionnaire. According to Hair et al. (2010) the minimum number of factor loading is 0.5 or ideally 0.7. If there is a value that is still below 0.5, it will be removed from the analysis.

Furthermore, the reliability test was carried out. The reliability coefficient ranges from 0-1, so the higher the coefficient (closer to number 1), the more reliable the measuring instrument is. Construct reliability is good if the construct reliability value is > 0.7 and the variance extracted value is > 0.5 (Yamin & Kurniawan, 2009). The results of the validity and reliability tests are shown in table 2.

Table 2. Validity and Reliability Test Results

Variable	Indicator	Standard Loading	Standard Loading^2	Measurement Error	CR	VE
Perceived Informativeness	PK3	0,782	0,612	0,388	0,9	0,7
	PK2	0,846	0,716	0,284		
	PK1	0,800	0,640	0,360		
Perceived Persuasiveness	PP4	0,819	0,671	0,329	0,8	0,6
	PP3	0,780	0,608	0,392		
	PP2	0,625	0,391	0,609		
	PP1	0,784	0,615	0,385		
Source Expertise	KS4	0,840	0,706	0,294	0,9	0,6
	KS3	0,808	0,653	0,347		
	KS2	0,804	0,646	0,354		
	KS1	0,760	0,578	0,422		
Source Trustworthiness	K3	0,833	0,694	0,306	0,9	0,7
	K2	0,825	0,681	0,319		
	K1	0,827	0,684	0,316		
E-Wom Credibility	KRE3	0,906	0,821	0,179	0,9	0,8
	KRE2	0,856	0,733	0,267		
	KRE1	0,860	0,740	0,260		

Variable	Indicator	Standard Loading	Standard Loading²	Measurement Error	CR	VE
E-Wom Adoption	AE3	0,861	0,741	0,259	0,9	0,7
	AE2	0,828	0,686	0,314		
	AE1	0,804	0,646	0,354		
	AE4	0,861	0,741	0,259		
Purchase Intention	NB1	0,843	0,711	0,289	0,8	0,6
	NB2	0,723	0,523	0,477		
	NB3	0,730	0,533	0,467		

Source: Data Processing (2021)

From Table 2, it can be seen that all indicators in this research already have a loading factor value of more than 0.5. The construct reliability of all variables has shown 0.7. As for the variance extracted in this research, each variable also has a value of 0.5. So it can be concluded that the questionnaire used for this research is valid and reliable.

Furthermore, the conformity test of the confirmatory model was tested using the Goodness of Fit Index. Hair et al. (1998) divided the GOFI (Goodness of Fit Index) criteria into 3 types of criteria, that is absolute fit indices, incremental fit indices and parsimony fit indices. Of the three types of GOFI there are 25 criteria in total, but according to Hair et al. (2010) in the SEM-Amos analysis does not require that all criteria are met, 4-5 criteria are sufficient as long as there are criteria that represent the three types of GOFI criteria. In this study, several criteria were taken from each type of GOFI, which is Chisquare, probability, RMSEA and GFI representing absolute fit indices, CFI and TLI representing incremental fit indices then PGFI and PNFI representing parsimony fit indices.

Table 3. Initial GOF Test Results

Fit Index	Goodness of Fit	Criteria	Cut-off value	Information
Absolute Fit	Chisquare	Small	485,059	Misfit
	Probability	≥ 0.05	0,000	Misfit
	GFI	≥ 0.90	0,868	Marginal Fit
Incremental Fit	CFI	≥ 0.90	0,950	Fit
	TLI	≥ 0.90	0,942	Fit
Parsimony Fit	PGFI	≥ 0.60	0,692	Fit
	PNFI	≥ 0.60	0,785	Fit

Source: Data Processing (2021)

From the results of the goodness of fit test in table 3, it can be seen that there are still 2 criteria that do not fit. Therefore, to increase the GOF value, it is

necessary to modify the model that refers to the modification index table by providing a covariance relationship or eliminating indicators that have a high MI (Modification Index) value. In the model modification process, there are several indicators that must be eliminated because they have high MI (Modification Index) values, which is KRE2, AE1 and NB2. After modifying the results, it shows that the Goddness of Fit value has met all the criteria so that the model in this study can be said to be Fit as shown in table 4.

Table 4. Final GOF Test Results

Fit Index	Goodness of Fit	Criteria	Cut-off value	Information
Absolute Fit	Chisquare	Small	193,490	Fit
	Probability	≥ 0.05	0,064	Fit
	GFI	≥ 0.90	0,938	Fit
Incremental Fit	CFI	≥ 0.90	0,993	Fit
	TLI	≥ 0.90	0,991	Fit
Parsimony Fit	PGFI	≥ 0.60	0,670	Fit
	PNFI	≥ 0.60	0,751	Fit

Source: Data Processing (2021)

Hypothesis Testing

The next analysis is the full model Structural Equation Model (SEM) analysis to test the hypotheses developed in this study. The results of the regression weight test in this study are as shown in Figure 2.

If the test results show a CR value of 1.96 and the probability value (P) is below 0.05/5%, then the proposed hypothesis is declared accepted. From the table of hypothesis test results, the results of this study are as follows:

1. Perceived Informativeness has a positive but not significant effect on E-Wom Credibility. This result is evidenced by a positive estimate value of 0.114, a t-statistics value below 1.96, which is 0.768 and a P-Value value above 0.05, which is 0.442. So H1 in this study is not supported.
2. Perceived Persuasiveness has a positive and significant effect on E-Wom Credibility. This result is evidenced by a positive estimate value of 0.324, a t-statistics value above 1.96, which is 2.040 and a P-Value value below 0.05, which is 0.041. So that H2 in this study is supported.
3. Source Expertise has a positive and significant effect on E-Wom Credibility. This result is evidenced by a positive estimate value of 0.385, a t-statistics value above 1.96 which is 2.250 and a P-Value value below 0.05, which is 0.024. So that H3 in this study is supported.
4. Source Trustworthiness has a positive and insignificant effect on E-Wom Credibility. These results are evidenced by a positive estimate value of

0.323, a t-statistics value below 1.96, which is 1.855 and a P-Value value above 0.05, which is 0.064. So H4 in this study is not supported.

5. E-Wom Credibility has a positive and significant effect on E-Wom Adoption. This result is evidenced by a positive estimate value of 0.818, a t-statistics value above 1.96, which is 15.576 and a P-Value value below 0.05, which is 0.000. So that H5 in this study is supported.
6. E-Wom Credibility has a positive and significant effect on Purchase Intention. These results are evidenced by a positive estimate value of 0.589, a t-statistics value above 1.96, which is 5.281 and a P-Value value below 0.05, which is 0.000. So that H6 in this study is supported.
7. E-Wom Adoption has a positive and significant effect on Purchase Intention. These results are evidenced by a positive estimation value of 0.267, a t-statistics value above 1.96, which is 2.311 and a P-Value value below 0.05, namely 0.021. So that H7 in this study is supported.

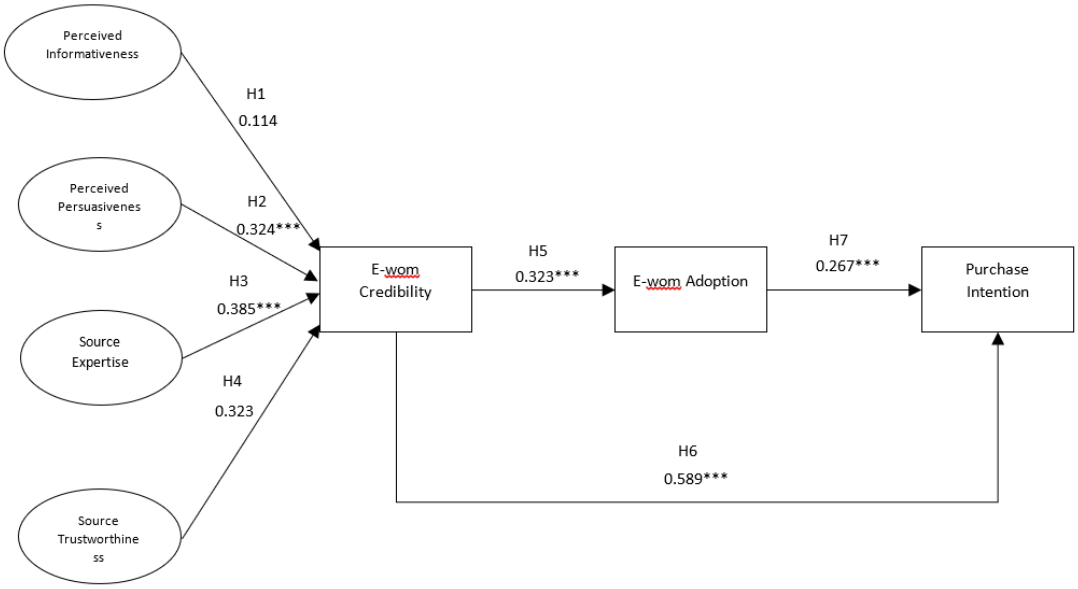

Figure 2. Hypothesis Analysis

Table 5. Regression weight test results

			Estimate	S.E.	C.R.	P	Explanation
E-Wom Credibility	<---	Perceived Informativeness	.114	.149	.768	.442	H_1 Not Supported

			Estimate	S.E.	C.R.	P	Explanation
E-Wom Credibility	<---	Perceived Persuasiveness	.324	.159	2.040	.041	H_2 Supported
E-Wom Credibility	<---	Source Expertise	.385	.171	2.250	.024	H_3 Supported
E-Wom Credibility	<---	Source Trustworthiness	.323	.174	1.855	.064	H_4 Not Supported
E-Wom Adoption	<---	E-Wom Credibility	.818	.052	15.576	.000	H_5 Supported
Purchase Intention	<---	E-Wom Credibility	.589	.112	5.281	.000	H_6 Supported
Purchase Intention	<---	E-Wom Adoption	.267	.116	2.311	.021	H_7 Supported

Source: Data Processing (2021)

Mediation Testing

The mediation test is seen from the significance of the indirect effect between variables as seen from the table of indirect effects-two tailed significance. The results of the indirect influence analysis are as follows:

Table 5. Mediating Result

	E-Wom Credibility	E-Wom Adoption	Purchase Intention
E-Wom Adoption	...	...	...
Purchase Intention	.006	...	...

Based on the mediation test, it is known that the value of the relationship between E-Wom Credibility and Purchase Intention mediated by E-Wom Adoption has a significance value of 0.006 and below 0.05, so it can be concluded that E-Wom Adoption significantly mediates the relationship between KRE and NB. So that H8 in this study is supported.

DISCUSSION

The results of the first hypothesis that the perceived informativeness has a positive and insignificant effect on the credibility of E-Wom, then H1 is not supported. This makes the quality of information available on media information

pages important for customers in determining purchasing decisions. E-Wom contained on information media pages that discuss travel products such as tripadvisor does not necessarily provide relevant, timely, and complete information. Thus, customers are not able to feel the use of E-Wom which can help them in making purchasing decisions.

The second hypothesis (H2) that perceived persuasiveness has a positive influence on the credibility of e-Wom is supported. The opinions expressed by reviewers on information media pages are written based on experience so that they can convince readers. When an information can convince the reader then the information is said to have persuasive power. When information readers perceive a persuasive perception of a review message, they will feel that the review is credible.

The results of the research for the third hypothesis that source expertise has a positive and insignificant effect on the credibility of E-Wom, then H3 is supported. When reviewers have used a travel product and vacation using tripadvisor services, they share their experience in the form of a review. The majority of readers have their own beliefs about airline or hotel products for purchase on tripadvisor. Therefore, customers lack trust in E-Wom so that it has nothing to do with the credibility of an order.

The fourth hypothesis (H4) that source trustworthiness has a positive influence on the credibility of e-Wom is supported. Readers as customers who read reviews on information media pages that discuss travel products think that product-related reviews have high trust. This is because reviewers provide reviews of their own experiences in using travel products.

The fifth hypothesis (H5) that E-Wom credibility has a positive influence on E-Wom adoption is supported. Online reviews based on customer experiences after consuming or using the product can reduce uncertainty and increase credibility. Respondents do not see who the reviewer is. Respondents immediately adopted the information that had been provided by the reviewer as another customer on the information media page because the information had been useful to them.

The sixth hypothesis (H6) that E-Wom credibility has a positive influence on purchase intention is supported. Online reviews sourced from customer experiences, either after consuming or using the product, are able to provide a response, namely the formation of a decision to purchase a product that is given a review. The customer's purchase intention is awakened instantly by the reviewer to other customers on the information media page because the information has been useful to them.

The seventh hypothesis (H7) of the relationship between usefulness and credibility on purchase intention mediated by E-Wom adoption is supported. This proves that when the information readers as customers feel the information they

get is useful, it can affect purchase intention. In addition, the fast flow of information causes a lot of information to be available on the information page. The information comes from various parties without any limitations of space and time. Therefore, respondents do not see who the reviewer is. Respondents immediately adopted the information that had been provided by the reviewer as another customer on the information media page.

CONCLUSION

This research aims to determine the effect of E-Wom communications among customers on their purchase intentions. Perception of informativeness supports the credibility of e-Wom. E-Wom contained on information media pages that discuss travel products such as tripadvisor does not necessarily provide relevant, timely, and complete information. Persuasive perception supports the credibility of E-Wom. When an information can convince the reader then the information is said to have persuasive power. Sourcing expertise does not support E-Wom's credibility. In the context of this research, the majority of readers have their own beliefs about airline or hotel products for purchase on tripadvisor. Trust in sources supports the credibility of E-Wom. The reviewers provide reviews about their own experiences in using skin care products. Information becomes useful when the information can be used by customers in the purchase decision-making process. Credibility supports the adoption of E-Wom. The results of this study proved that respondents do not acknowledge who the reviewers are. Respondents immediately adopt the information that had been received as customer on the information media page because the information had been perceived as useful to them. The relationship between EWOM credibility and purchase intention is mediated by E-Wom adoption. When the information readers as customers feel the information they get is useful, it can influence purchase intention. The existence of this EWOM adoption process can increase the influence of customer's purchase intention.

REFERENCES

Baber, A. T. (2016) 'Online word-of-mouth antecedents, attitude and intention-to-purchase electronic products in Pakistan', *Telematics and Informatics,* 33(2), pp.388–400. https://doi.org/10.1016/j.tele.2015.09.004

Cheung, C. M. (2008) 'The adoption of online opinions in online customer communities'', *Internet Research,* 18(3), pp. 229–247. https://doi.org/10.1108/10662240810883290

Cheung, M. L. (2009) 'Credibility of electronic word-of-mouth: Informational and normative determinants of on-line consumer recommendations', *International Journal of Electronic Commerce*, 13(4), pp.9–38. https://doi.org/10.2753/JEC1086-4415130402

Cheung, R. (2014) 'The Influence of Electronic Word-of-Mouth on Information Adoption in Online Customer Communities', *Global Economic Review: Perspectives on East Asian Economies and Industries*, 43(1), pp.42–57. https://doi.org/10.1080/1226508X.2014.884048

Erkan, I. and. Evans, C. (2016) 'The influence of eWOM in social media on consumers' purchase intentions: An extended approach to information adoption', *Computers in Human Behavior, 61*, pp.47–55. https://doi.org/10.1016/j.chb.2016.03.003

Fang, Y. H. (2014) 'Beyond the credibility of electronic word of mouth: Exploring eWOM adoption on social networking sites from affective and curiosity perspectives'. *International Journal of Electronic Commerce*, 18(3), pp.67-102. https://doi.org/10.2753/JEC1086-4415180303

Gunawan, D. D. (2015) 'Viral effects of social network and media on consumers' purchase intention', *Journal of Business Research*, 68(11), pp.2237–2241. https://doi.org/10.1016/j.jbusres.2015.06.004

Hair, J. F., Black, W. C., Babin, B. J., and Anderson, R. E. (2010) '*Multivariate Data Analysis'* (7th ed.). New York: Prentice Hall.

King, A. R. (2014) 'What We Know and Don't Know About Online Word-of-Mouth : A Review and Synthesis of the Literature', *Journal of Interactive Marketing*, 28(3), pp.167–183. https://doi.org/10.1016/j.intmar.2014.02.001

Larson, K. and Watson, R. (2011) 'The value of social media: toward measuring social media strategies', *ICIS 2011 Proceedings*. 10. https://aisel.aisnet.org/icis2011/proceedings/onlinecommunity/10

Sussman, S. W. (2003) 'Informational Influence in Organizations: An Integrated Approach to Knowledge Adoption', *Information System Research,* 14(1), pp. 47–65. https://doi.org/10.1287/isre.14.1.47.14767

Tien, D. H. (2019) 'Examining the influence of customer-to-customer electronic word-of-mouth on purchase intention in social networking sites', *Asia Pacific Management Review*, 24(3), pp. 238–249. https://doi.org/10.1016/j.apmrv.2018.06.003

wearesocial.com. (2020, January). Retrieved from Digital 2020 - We Are Socia: https://wearesocial.com/digital-2020.

Zhu, D. H. (2016) 'Understanding the influence of C2C communication on purchase decision in online communities from a perspective of information adoption model', *Telematics and Informatics*, 33(1), pp. 8–16. https://doi.org/10.1016/j.tele.2015.06.001